Built In Hoods

Hit - Fully Built-In Hoods

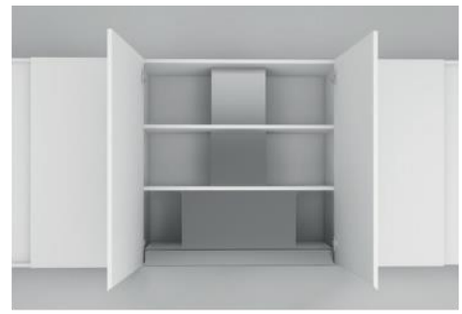

Finishing 100% stainless steel
Optional Decorative upper chimney.

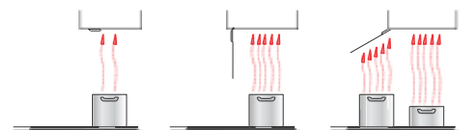

Hit Range

Size (mm)	Finishing	Num. of filters	Num. of LED's	Motor	Recirculation	Reference
600 x 330	Stainless steel	1	1	VF600	Optional	26150
900 x 330	Stainless steel	2	1	VF700	Optional	26151
1200 x 330	Stainless steel	4	1	VF700	Optional	26152

Please find all motor details on page 48

FSA | Last-time | LED | S/S Filters | TouchControl | VF-Silence+ | TouchControl

Technical informations

- Finishing stainless steel & transparent glass.
- Hood body & motor box finished in stainless steel.
- Motor VF Silent PLUS.
- 3 speeds + booster.
- Touch control.
- Deferred stop (Last time).
- Filter saturation warning light.
- LED stripe lighting (5W/meter - 2700K).
- Perimetral aspiration & traditional.
- Stainless steel filters.

Included accessories

Adjustable 350 mm depth accessory.
"L" door protector 600, 900 & 1200

Optional accessories

	Reference
Twin carbon kit 600	90361
Twin carbon kit 900	90359
Twin carbon kit 1200	90360
"L" DOUBLE door protector 60	90297
"L" DOUBLE door protector 90	90298
"L" DOUBLE door protector 120	90299
Decorative upper chimney	90221
AirSoft 1 silencer ducting Ø150	90182

Note - Fully Built-In Hoods

Note

Outlet 150 mm.

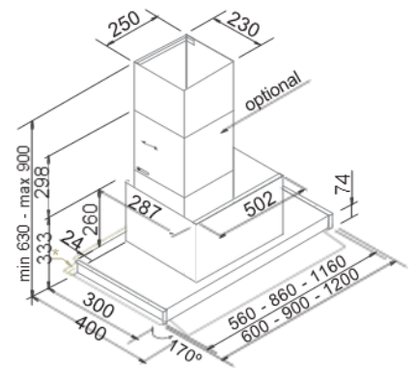

* Adaptable 325 to 350 mm. depth accessorie included.
Optional Decorative upper chimney not valid for Plasma version.

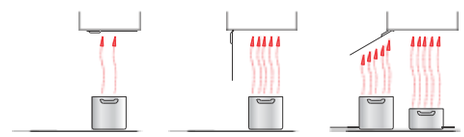

Perimetral aspiration | Open door at 90° | Open door at 175°

Note Range

Size (mm)	Finishing	Num. of filters	Num. of LED's	Motor	Recirculation	Reference
600 x 300	Stainless steel	1	2	VF600	Optional	26166
900 x 300	Stainless steel	2	2	VF700	Optional	26167
1200 x 300	Stainless steel	3	2	VF700	Optional	26168

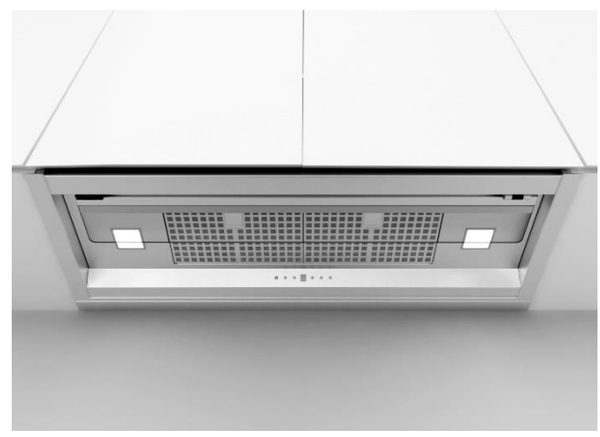

Please find all motor details on page 48

FSA | Last-time | LED | Remote | S/S Filters | Electronic C. | VF-Silence+

Technical information

- Finishing stainless steel & transparent glass.
- Hood body & motor box finished in stainless steel.
- Motors VF Silent PLUS.
- 3 speeds + booster.
- Electronic Control.
- Deferred stop (Last time).
- Filter saturation warning light.
- LED lighting (2,1W - 3000K).
- Perimetral aspiration & traditional.
- Stainless steel filters.
- Remote control.

Included accessories

Adjustable 325 to 350 cm. depth accessory.

"L" door protector 600, 900 & 1200

Optional accessories

	Reference
Twin carbon kit 600	90362
Twin carbon kit 900	90358
Twin carbon kit 1200	90359
Decorative upper chimney	90221
"L" DOUBLE door protector 60	90297
"L" DOUBLE door protector 90	90298
"L" DOUBLE door protector 120	90299
AirSoft 1 silencer ducting Ø150	90182

GA Glass II - Fully Built-In Hoods

GA Glass II (Fondo 327)

Outlet 150 mm.

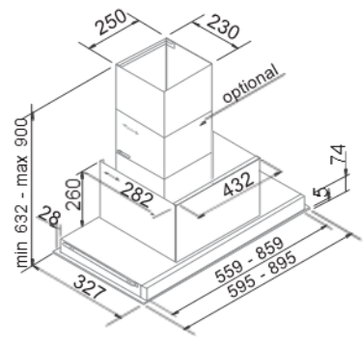

GA Glass II (Fondo 300)

Outlet 150 mm.

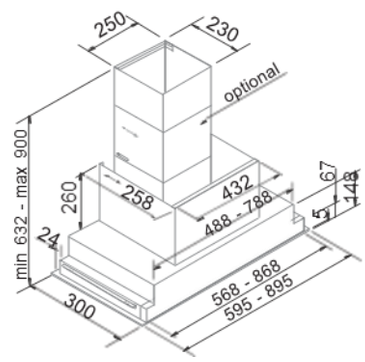

GA Glass II

Size (mm)	Finishing	Num. of filters	Num. of LED's	Motor	Recirculation	Reference
600 x 327	White Glass	1	1	VF600	Optional	26140
900 x 327	White Glass	2	1	VF700	Optional	26141
600 x 300	White Glass	1	1	VF600	Optional	26143
900 x 300	White Glass	2	1	VF700	Optional	26144

Please find all motor details on page 48

FSA · Last-time · LED · TouchControl · VF/GP-Silence+

Technical information

- Finishing White Glass.
- Hood body & motor box finished in stainless steel.
- Motors VF Silent PLUS.
- 3 speeds + booster.
- Touch control.
- Deferred stop (Last time).
- Filter saturation warning light.
- LED lighting stripe (5W/meter - 2700K).
- Perimetral aspiration & traditional.
- Aluminium filters.

Included accessories

"L" door protector 600, 900 & 1200

Optional accessories

	Reference
Recirculation fiter	90258
Decorative upper chimney	90221
"L" DOUBLE door protector 60	90297
"L" DOUBLE door protector 90	90298
"L" DOUBLE door protector 120	90299
AirSoft 1 silencer ducting Ø150	90182

Ducting and accessories

GA Perimetral - Fully Built-In Hoods

GA Perimetral

Outlet 150 mm.

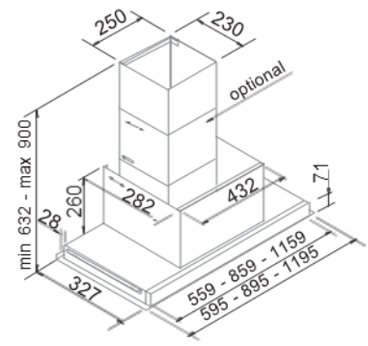

GA Perimetral

Size (mm)	Finishing	Num. of filters	Num. of LED's	Motor	Recirculation	Reference
600 x 327	Stainless steel	1	1	VF600	Optional	26145
900 x 327	Stainless steel	2	1	VF700	Optional	26146
900 x 327	Stainless steel	2	1	1100GP	Optional	26147
1200 x 327	Stainless steel	4	2	VF700	Optional	26148
1200 x 327	Stainless steel	4	2	1100GP	Optional	26149

Please find all motor details on page 48

Technical information

- Finishing stainless steel.
- Hood body & motor box finished in stainless steel.
- Motors VF & EBM GP Silent PLUS.
- 3 speeds + booster.
- Electronic Control.
- Deferred stop (Last time).
- Filter saturation warning light.
- LED lighting stripe (5W/meter - 2700K).
- Perimetral aspiration & traditional.
- Aluminium filters.

Included accessories

"L" door protector 600, 900 & 1200

Optional accessories

	Reference
Recirculation fiter	90258
Decorative upper chimney	90221
327 to 350 adjustable depth accessory 60	90225
327 to 350 adjustable depth accessory 90	90256
327 to 350 adjustable depth accessory 120	90257
"L" DOUBLE door protector 60	90297
"L" DOUBLE door protector 90	90298
"L" DOUBLE door protector 120	90299
AirSoft 1 silencer ducting Ø150	90182

Ducting and accessories

Feel – Integrated Hoods

Feel

Outlet 150 mm.

Cut Out: 530 x 259 mm. - 730 x 259 mm. - 970 x 259 mm.

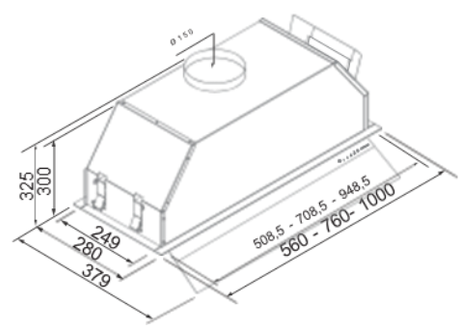

Perimetral aspiration | Open door at 90° | Open door at 160°

Feel

Size (mm)	Finishing	Num. of filters	Num. of LED's	Motor	Recirculation	Reference
560 x 280	Stainless steel	1	1	VF600	Optional	26171
760 x 280	Stainless steel	2	1	VF700	Optional	26172
1000 x 280	Stainless steel	3	1	VF700	Optional	26173

Please find all motor details on page 48

Technical information

- Finishing stainless steel & transparent glass.
- Motor VF Silent PLUS.
- 3 speeds + booster.
- Touch control.
- Deferred stop (Last time).
- Filter saturation warning light.
- LED lighting stripe (5W/meter - 2700K).
- Perimetral aspiration & traditional.
- Stainless steel filters.

Optional accessories

	Reference
Recirculation kit	900134
Airsoft 1 silencer ducting Ø150.	90182

GA Filo – Integrated Hoods

GA Filo

Outlet 150 mm.

Cut Out 524 x 259 mm. - 724 x 259 mm. - 964 x 259 mm.

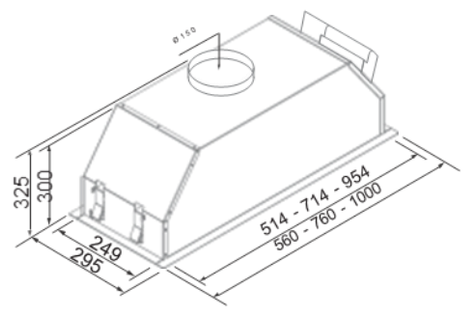

Height by default 390 mm. Possibility of height 345 mm.
moving the electronics to the side body of the hood.

GA Filo - Standard Range

Size (mm)	Finishing	Num. of filters	Num. of LED's	Motor	Recirculation	Reference
560 x 295	Stainless steel	2	2	VF600	Optional	26176
760 x 295	Stainless steel	3	2	VF700	Optional	26177
760 x 295	Stainless steel	3	2	1100GP	Optional	26178
1000 x 295	Stainless steel	4	2	VF700	Optional	26179
1000 x 295	Stainless steel	4	2	1100GP	Optional	26180

Please find all motor details on page 48

Optional accessories

	Reference
Recirculation kit	90134
Airsoft 1 silencer ducting Ø150.	90182

FSA · Last-time · LED · Electronic C. · VF/GP-Silence+

Technical information

- Finishing stainless steel AISI 304
- Motors VF & EBM GP Silent PLUS.
- 3 speeds + booster.
- Electronic Control.
- Deferred stop (Last time).
- Filter saturation warning light.
- LED lighting (1,2W - 3000K).
- Aluminium filters.
- Remote control.

See pages 10 & 11 for more details on FSR (Frecan Silence Range)

Silence Range – *special order*

Size (mm)	Finishing	Num. of filters	Num. of LED's	Motor	Recirculation	Reference
560 x 295	Stainless steel	2	2	S8	Optional	26009
760 x 295	Stainless steel	3	2	S8	Optional	26010
1000 x 295	Stainless steel	3	2	S8	Optional	26011

Please find all motor details on page 48